PLAN 1:10

back at top, table end at left

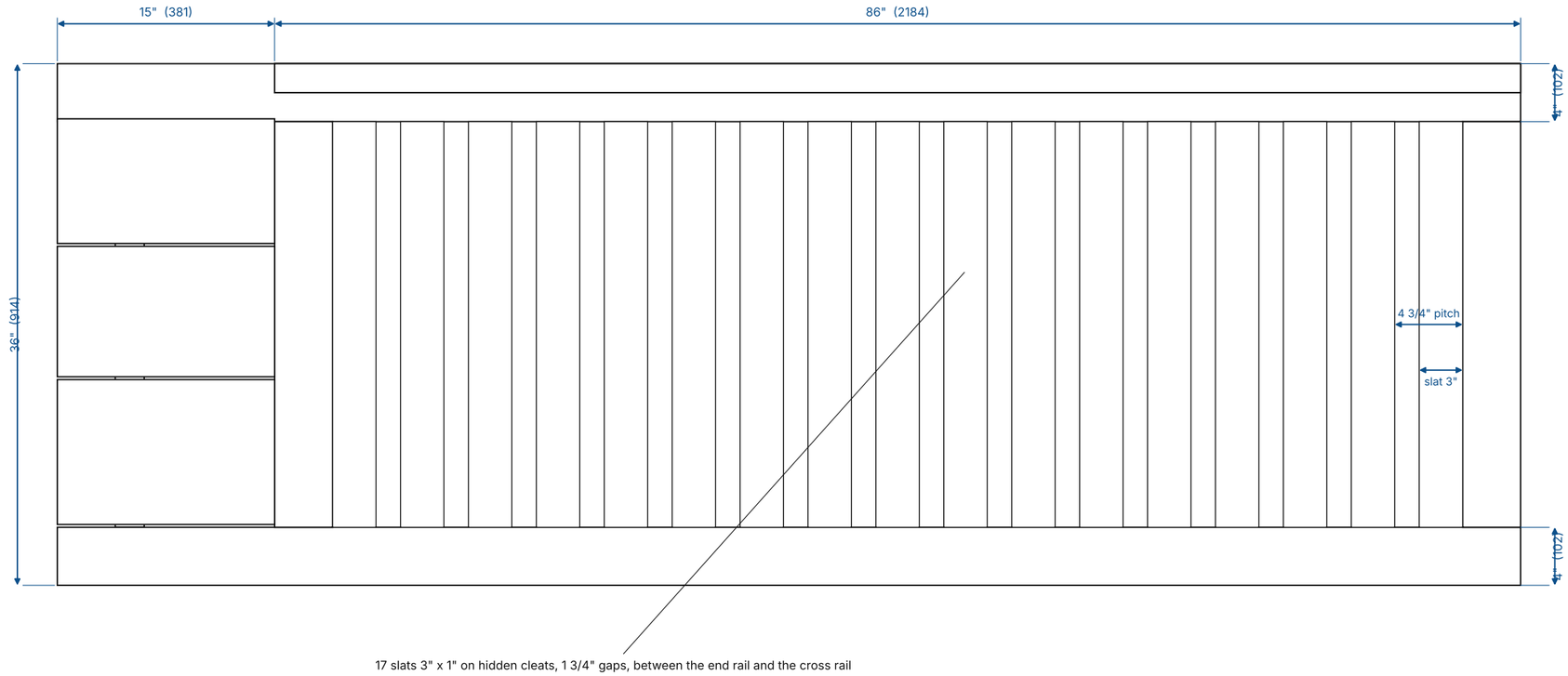

END ELEVATION 1:15

from the table end; front at right

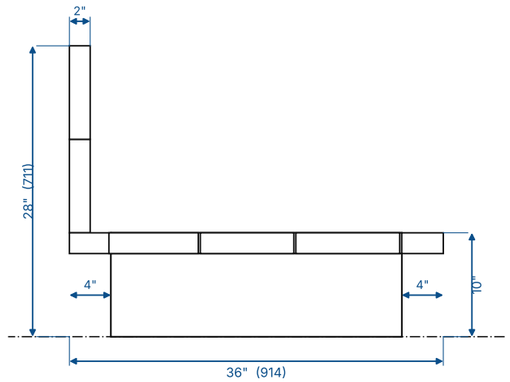

FRONT ELEVATION 1:10

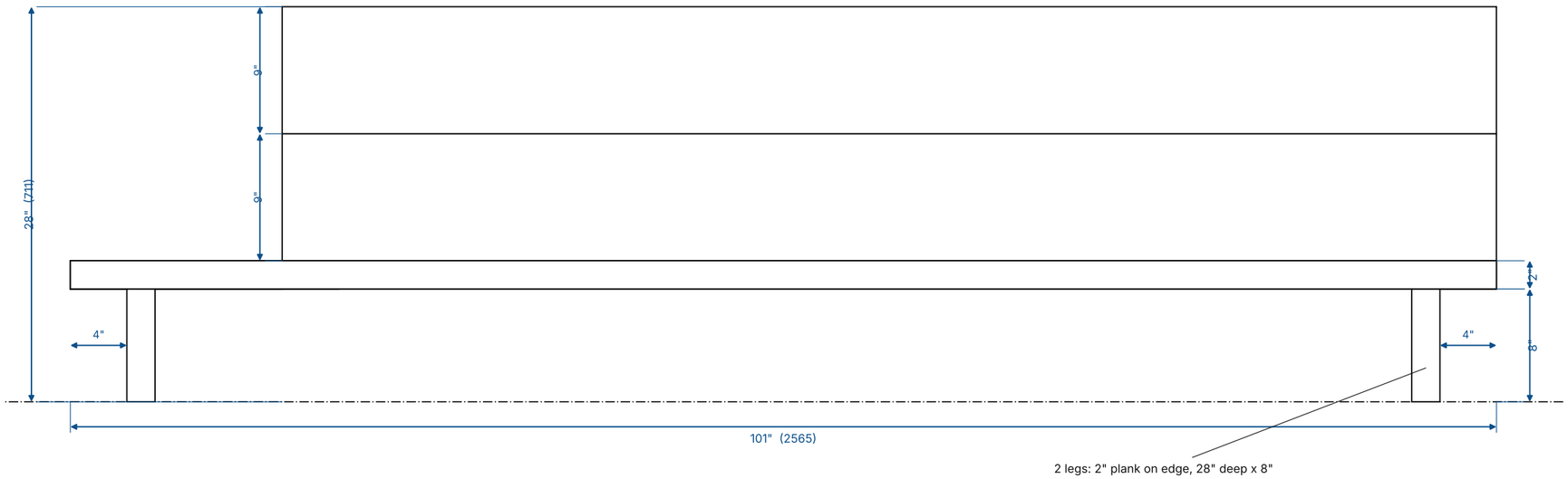

NOTES

1. All timber 2" thick reclaimed teak: front and back rails run the full 101"; 4" end rail at the seat end and 4" cross rail at the seat/table junction; table = 3 lengthwise planks, ends exposed.
2. Backrest: two 2" slabs (9" + 9") sitting on the back rail, rear face flush. Top at 28" AFF.
3. Deck: 17 slats on cleats, flush with the frame top, seat area only.
4. Legs: two 2" planks on edge, 8" tall, set in 4" from ends, 4" front / 4" rear.
5. Reclaimed stock - allow for finishing.

Measured on the existing store unit 2026-10-17; Option B FINAL: all timber 2in, legs 8in, seat cushion 8in. Slatted seat deck between end rail and cross rail; 3 lengthwise table planks.

SWAY ISLAND LIVING - FURNITURE DESIGN ISLANDER SOFA WITH TABLE - LEFT-HAND (table at the left, facing the sofa) - OPTION B - reclaimed teak		
FRAME - PLAN AND ELEVATIONS (cushions removed)		SHEET 1 / 5
Date 2026-10-19	Scale 1:10 / 1:15 @ A3	inches (mm)

SECTION A-A 1:8

through a slat at mid-length, with cushions

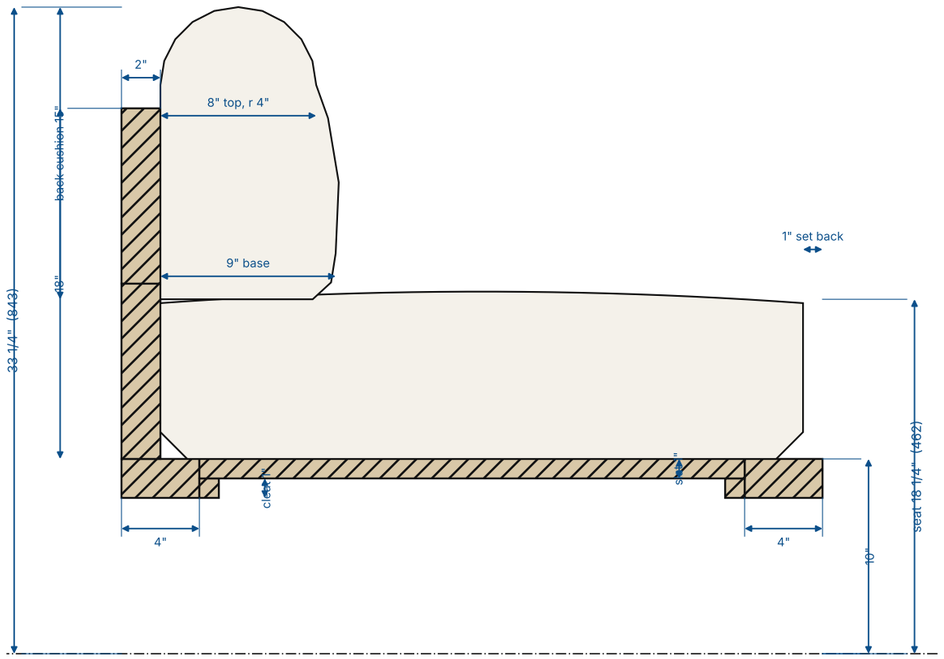

SECTION B-B 1:12

through a leg plank

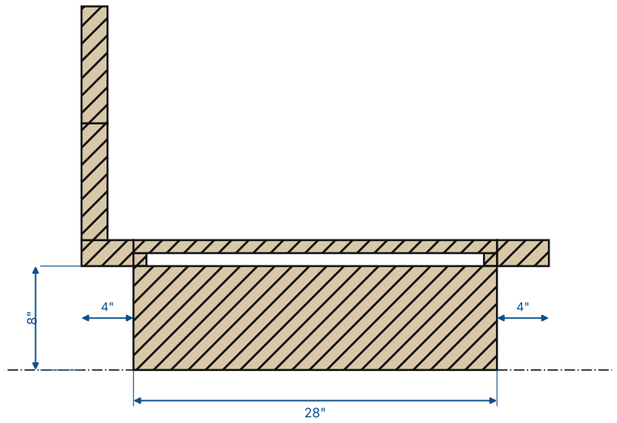

CONSTRUCTION NOTES

- Rails: full-thickness reclaimed teak, square butt joints at corners (as original); glue + concealed screws or dowels from inside.
- Cleats 1" sq. screwed inside the front and back rails, top set down 1" so slats finish flush.
- Slats 3" x 1" x 28", screwed to cleats, 1 3/4" gaps for drainage / airflow.
- Backrest is a separate flat-packed assembly: fixed with 5 screws up through the base rail into the underside of the backrest.
- Legs 2" x 8" x 28" housed into the rails or screwed up through the cleats; keep set back.
- Finish: oil; leave reclaimed checks and nail holes.

DECK FRAMING PLAN 1:15

cleats dashed (hidden under slats)

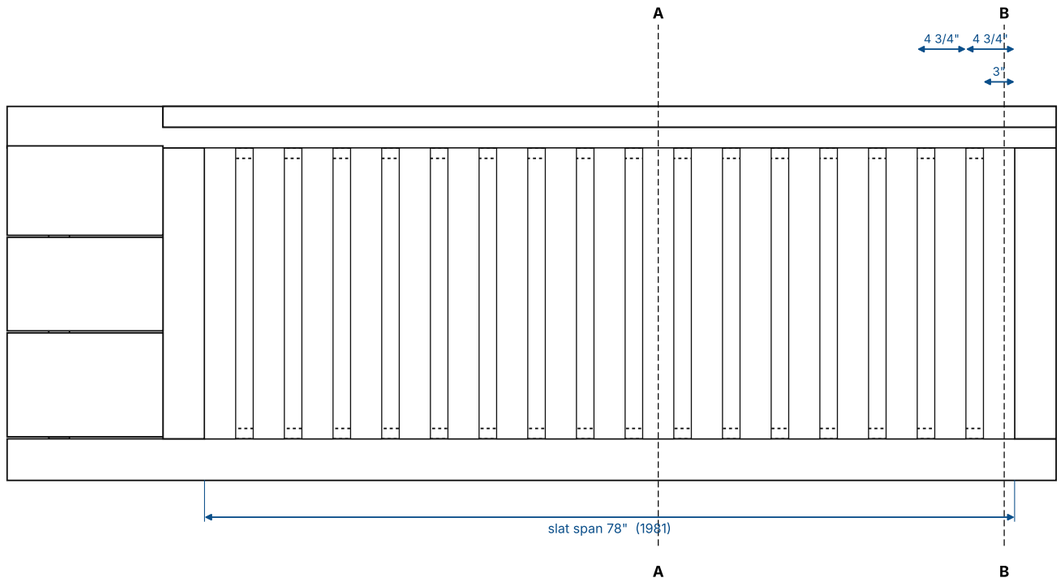

Measured on the existing store unit 2026-10-17; Option B FINAL: all timber 2in, legs 8in, seat cushion 8in. Slatted seat deck between end rail and cross rail; 3 lengthwise table planks.

SWAY ISLAND LIVING - FURNITURE DESIGN ISLANDER SOFA WITH TABLE - LEFT-HAND (table at the left, facing the sofa) - OPTION B - reclaimed teak		
FRAME - SECTIONS AND DECK FRAMING		SHEET 2 / 5
Date 2026-10-19	Scale 1:8 / 1:12 / 1:15 @ A3	inches (mm)

PLAN 1:10

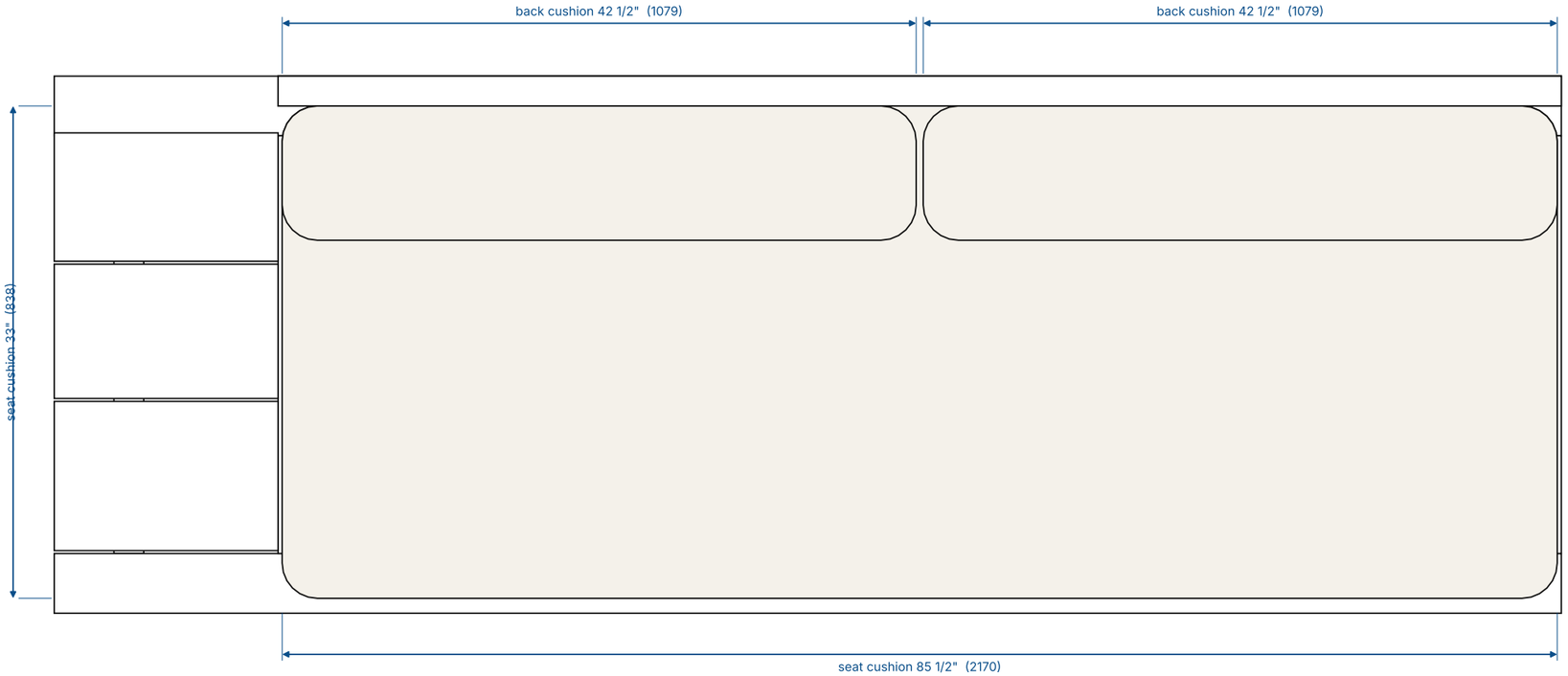

END ELEVATION 1:15

from the table end

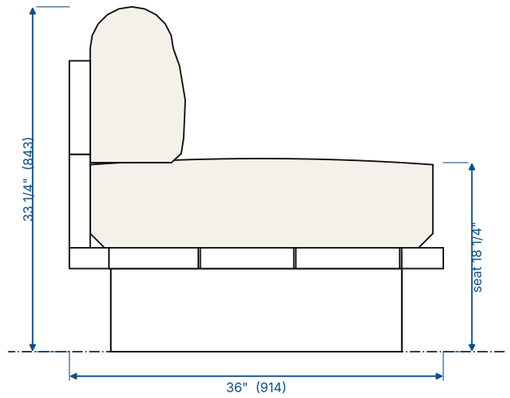

FRONT ELEVATION 1:10

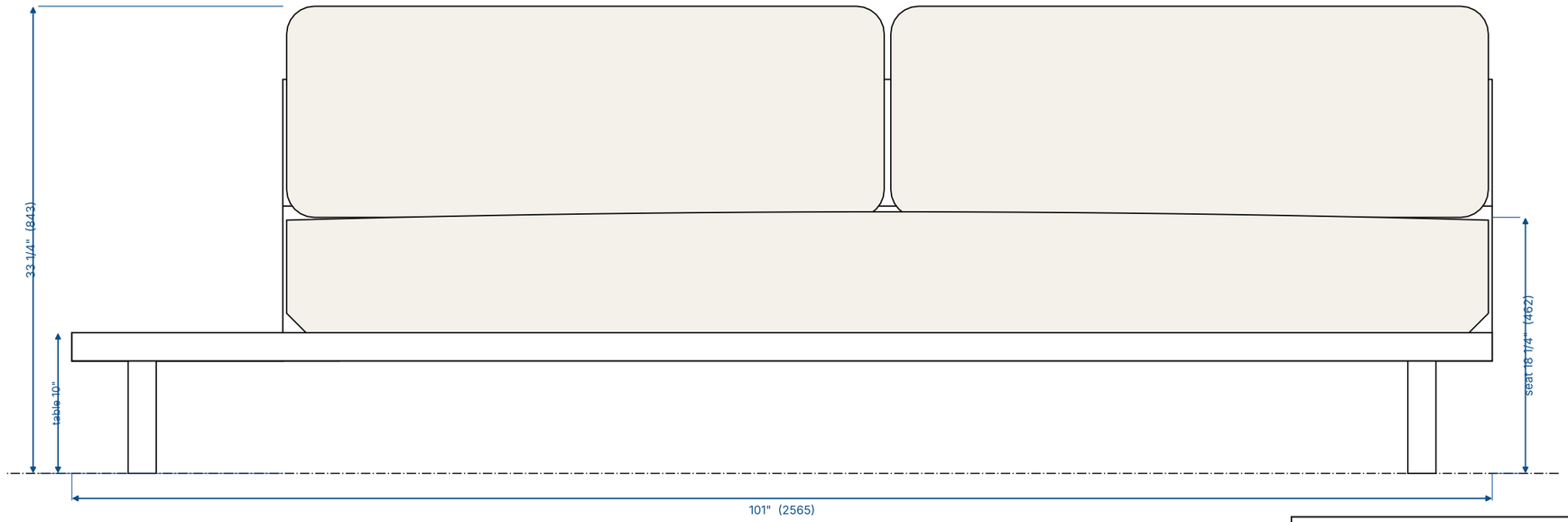

BACK ELEVATION 1:26

table at right

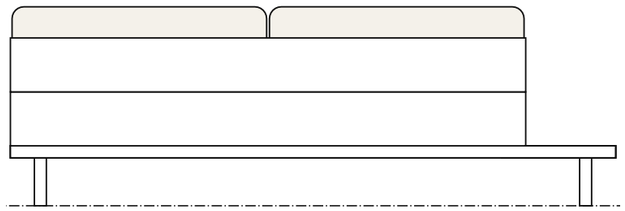

Measured on the existing store unit 2026-10-17; Option B FINAL: all timber 2in, legs 8in, seat cushion 8in. Slatted seat deck between end rail and cross rail; 3 lengthwise table planks.

SWAY ISLAND LIVING - FURNITURE DESIGN ISLANDER SOFA WITH TABLE - LEFT-HAND (table at the left, facing the sofa) - OPTION B - reclaimed teak		
WITH CUSHIONS - PLAN AND ELEVATIONS		SHEET 3 / 5
Date 2026-10-19	Scale 1:10 / 1:15 @ A3	inches (mm)

FRAME - front-left

WITH CUSHIONS - front-left

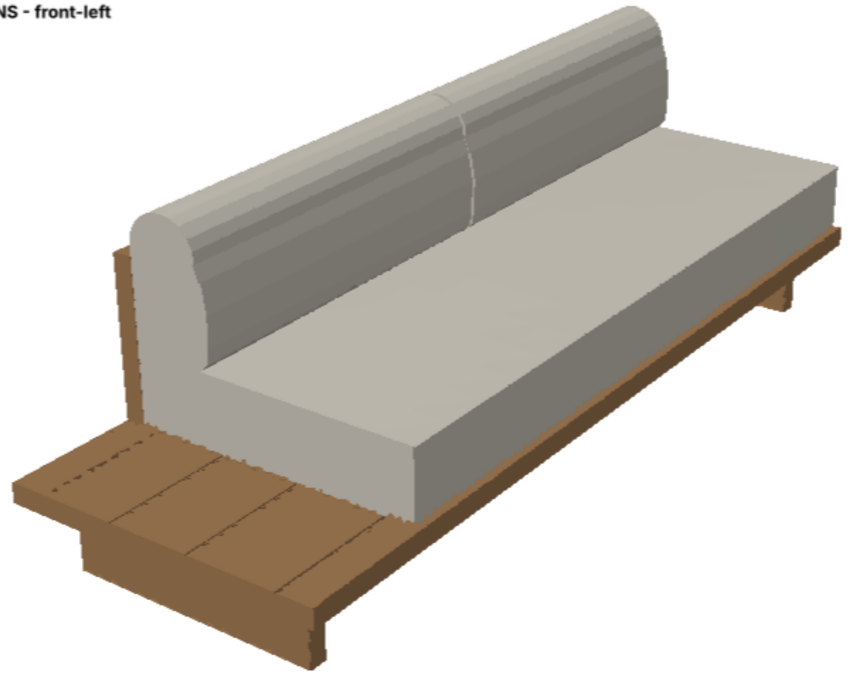

FRAME - rear-right

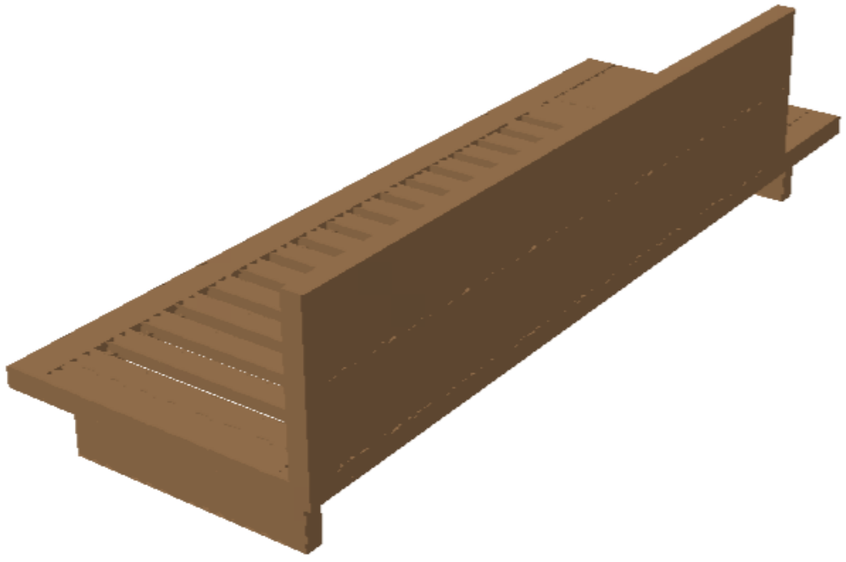

WITH CUSHIONS - rear-right

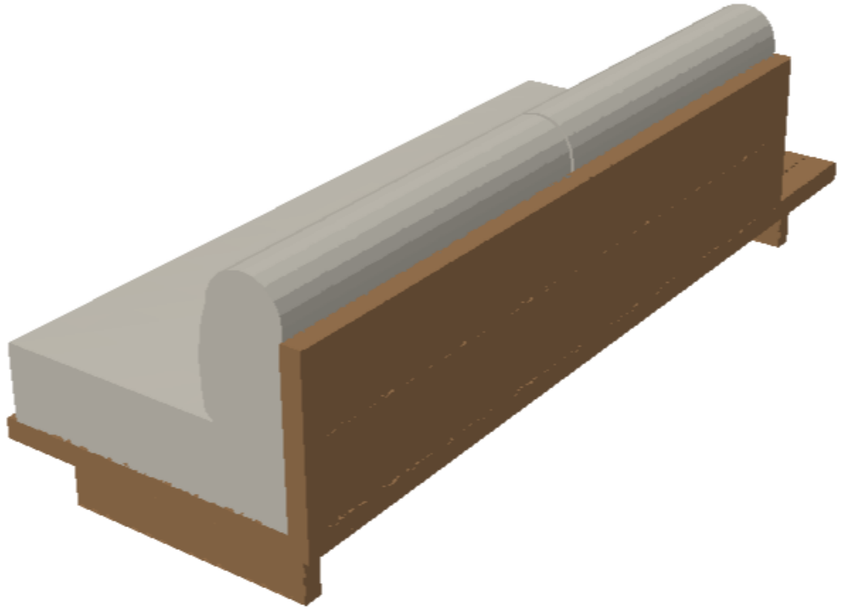

Measured on the existing store unit 2026-10-17; Option B FINAL: all timber 2in, legs 8in, seat cushion 8in. Slatted seat deck between end rail and cross rail; 3 lengthwise table planks.

SWAY ISLAND LIVING - FURNITURE DESIGN ISLANDER SOFA WITH TABLE - LEFT-HAND (table at the left, facing the sofa) - OPTION B - reclaimed teak		
3D REFERENCE VIEWS		SHEET 4 / 5
Date 2026-10-19	Scale n/a @ A3	inches (mm)

CUT LIST

Part	Qty	Size (inches) L x W x T	Size (mm)
FRAME - reclaimed teak, all stock 2" thick (slats and cleats 1in)			
Front rail	1	101" x 4" x 2"	2565 × 102 × 51
Back rail	1	101" x 4" x 2"	2565 × 102 × 51
End rail	1	28" x 4" x 2"	711 × 102 × 51
Cross rail	1	28" x 4" x 2"	711 × 102 × 51
Table plank 1	1	15" x 10" x 2"	381 × 254 × 51
Table plank 2	1	15" x 9" x 2"	381 × 229 × 51
Table plank 3	1	15" x 8 5/8" x 2"	381 × 219 × 51
Backrest slab, lower	1	86" x 9" x 2"	2184 × 229 × 51
Backrest slab, upper	1	86" x 9" x 2"	2184 × 229 × 51
Leg plank	2	28" x 8" x 2"	711 × 203 × 51
Deck slat	17	28" x 3" x 1"	711 × 76 × 25
Cleat (hidden)	2	78" x 1" x 1"	1981 × 25 × 25
CUSHIONS - outdoor performance fabric (Sunbrella or solution-dyed olefin), foam core with fibre wrap			
Seat cushion	1	85 1/2" x 33" x 8" (+5/8" crown)	2170 × 838 × 203
Back cushion (pillow, rounded top)	2	42 1/2" w x 15" h, 9" base / 8" top, 4" radius	1079 × 381, 229/203
KEY HEIGHTS (above floor)			
Frame underside / table top		8" / 10"	203 / 254
Seat cushion top (edge / crown)		18 1/4" / 18 5/8"	462 / 472
Wood backrest top		28"	711
Back cushion top (overall height)		33 1/4"	843
Overall footprint		101" x 36"	2565 × 914

Reclaimed stock: allow for finishing; keep the totals. Fabric yardage not calculated.

Measured on the existing store unit 2026-10-17; Option B FINAL: all timber 2in, legs 8in, seat cushion 8in. Slatted seat deck between end rail and cross rail; 3 lengthwise table planks.

SWAY ISLAND LIVING - FURNITURE DESIGN

ISLANDER SOFA WITH TABLE - LEFT-HAND (table at the left, facing the sofa) - OPTION B - reclaimed teak

CUT LIST AND CUSHION SCHEDULE		SHEET 5 / 5
Date 2026-10-19	Scale n/a @ A3	inches (mm)